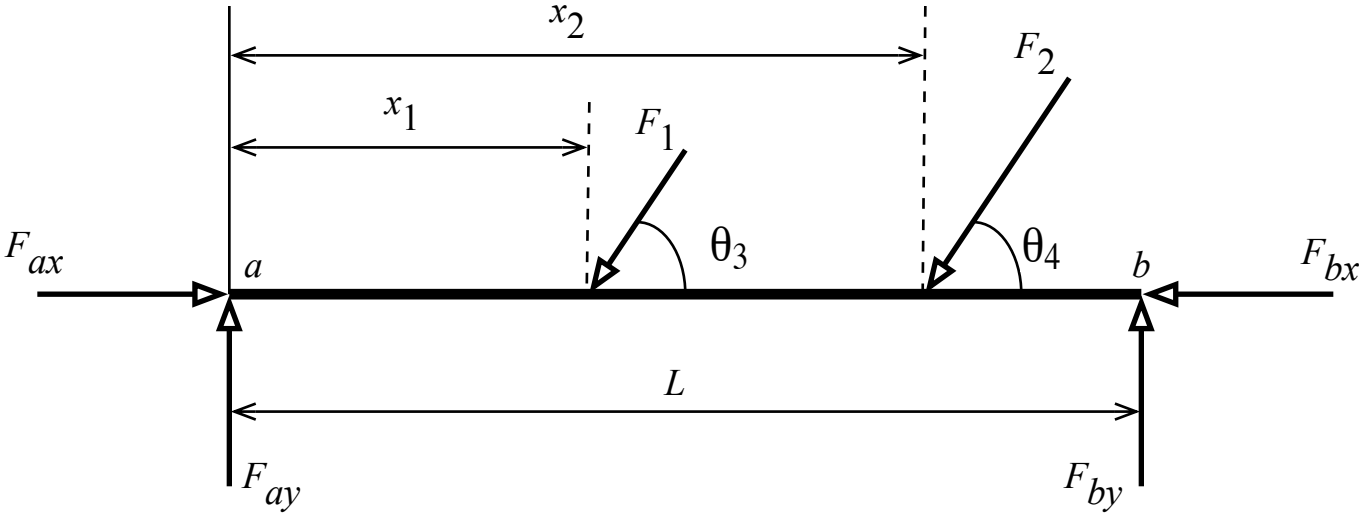
x_2
x_1
F_1
F_2
θ_3
θ_4
F_{ax}
a
b
F_{bx}
L
F_{ay}
F_{by}